MTH 222 Theory of Computation

First Mid Semester Examination (Exercise set A)

Total marks: 25 | September 2002 | Time: $1 + \epsilon$ hours

---

Name: **Roll Number:**

---

1. Which of the following statements are true? (Write True/False in the box provided.) **(5)**

(a) $\mathcal{L}(((ab)^*(ba)^*) \cap ((ba)^*(ab)^*)) = \{\epsilon\}$.

(b) $abcd \in \mathcal{L}((d^*c^*b^*a^*)^*)$.

(c) If L_1 and L_2 are regular languages (over some alphabet Σ), then so is their symmetric difference $(L_1 \setminus L_2) \cup (L_2 \setminus L_1)$.

(d) The language of a DFA (over Σ) in which the only final state is the start state is $\{\epsilon\}$.

(e) The language $\{\alpha \in \{a, b\}^* \mid \alpha \text{ contains an odd number of } b\text{'s}\}$ is regular.

---

2. Let $\Sigma := \{a, b, \ldots, z\}$ be the Roman alphabet and L the 'English' language, i.e., the (finite) language of all valid English words over Σ. Does there exist a DFA D with 20 states such that $\mathcal{L}(D) = L$? (**Remark:** If you are stupefied by the incomprehensibleness of this exercise, ask for DDT to kill rodents.) **(5)**

3. Let $\Sigma := \{a, b\}$ and $L := \{\alpha \in \Sigma^* \mid \alpha \text{ starts with } aa \text{ but does not end with } aa\}$.

(a) Write a regular expression (over Σ) to represent L. **(2)**

(b) Design a DFA whose language is L. **(4)**

(c) Design an NFA (or ϵ-NFA) whose language is L. **(3)**

4. Let Σ be a given alphabet. An e x t e n d e d r e g u l a r e x p r e s s i o n (ERE) over Σ is a string α over $\Sigma \uplus \{\emptyset, \epsilon, (,), \cup, ^*, ^+, ?, !, \cdot\}$ defined inductively as follows:

(1) ϕ, ϵ and a are ERE's (for each $a \in \Sigma$).

(2) If α is an ERE, then so is (α).

(3) If α and β are ERE's, then so is $\alpha\beta$.

(4) If α and β are ERE's, then so is $\alpha \cup \beta$.

(5) If α is an ERE, then so is α^*.

(6) If α is an ERE, then so is α^+.

(7) If α is an ERE, then so is $\alpha?$.

(8) If α is an ERE, then so is $!\alpha$.

(9) $\cdot$ is an ERE.

(10) Nothing is an ERE unless it follows from (1)–(9) above.

Rules (1)–(5) bear the same meanings as for RE's. The informal meanings for (6)–(9) are as follows:

α^+ means one or more occurrence(s) of α.

$\alpha?$ means 0 or 1 occurrence of α.

$!\alpha$ means $\beta \in \Sigma^*$ belongs to the language of $!\alpha$, if and only if $\beta \notin \mathcal{L}(\alpha)$.

$\cdot$ means the single occurrence of any element of Σ.

(a) Formally extend the definition of $\mathcal{L}$ for ERE's, i.e., for ERE's α and β and $a \in \Sigma$ complete the following definitions: **(4)**

$\mathcal{L}(\phi) := \phi$. $\mathcal{L}(\epsilon) := \{\epsilon\}$. $\mathcal{L}(a) := \{a\}$.

$\mathcal{L}((\alpha)) := \mathcal{L}(\alpha)$.

$\mathcal{L}(\alpha\beta) := \mathcal{L}(\alpha)\mathcal{L}(\beta)$.

$\mathcal{L}(\alpha \cup \beta) := \mathcal{L}(\alpha) \cup \mathcal{L}(\beta)$.

$\mathcal{L}(\alpha^*) := (\mathcal{L}(\alpha))^*$.

$\mathcal{L}(\alpha^+) :=$

$\mathcal{L}(\alpha?) :=$

$\mathcal{L}(!\alpha) :=$

$\mathcal{L}(\cdot) :=$

(b) Let $\Sigma := \{a, b\}$. Find a regular expression (over Σ) whose language is the same as the language of the ERE $aa(\cdot^*)(!a)(a?)$. **(2)**

5. [Bonus problem] Give an informal description of the language accepted by the following NFA. **(10)**

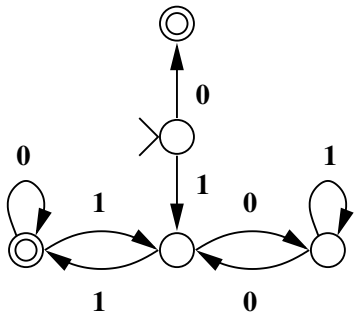

MTH 222 Theory of Computation

First Mid Semester Examination (Exercise set B)

Total marks: 25 | September 2002 | Time: $1 + \epsilon$ hours

---

Name: **Roll Number:**

---

1. Which of the following statements are true? (Write True/False in the box provided.) **(5)**

(a) The language of a DFA (over Σ) in which every state except the start state is final is Σ^+. [ ]

(b) $\mathcal{L}((ab^*ba^*) \cap (ba^*ab^*)) = \{\epsilon\}$. [ ]

(c) $abcd \in \mathcal{L}((b^*a^*)^*(d^*c^*)^*)$. [ ]

(d) The language $\{\alpha \in \{a,b\}^* \mid \alpha \text{ contains an even number of } a\text{'s}\}$ is regular. [ ]

(e) If L_1 and L_2 are regular languages (over some alphabet Σ), then so is their exclusive or $(L_1 \cup L_2) \setminus (L_1 \cap L_2)$. [ ]

---

2. Let L be a finite language over the binary alphabet $\{0,1\}$. Assume that $|L| = m$. Let D be a DFA with n states such that $\mathcal{L}(D) = L$. Show that $n \geqslant \log_2(m+1)$. **(5)**

3. Let $\Sigma := \{a, b\}$ and $L := \{\alpha \in \Sigma^* \mid \alpha \text{ ends with } bb \text{ but does not start with } bb\}$.

(a) Write a regular expression (over Σ) to represent L. **(2)**

(b) Design a DFA whose language is L. **(4)**

(c) Design an NFA (or ϵ-NFA) whose language is L. **(3)**

4. Let Σ be a given alphabet. An e x t e n d e d r e g u l a r e x p r e s s i o n (ERE) over Σ is a string α over $\Sigma \uplus \{\emptyset, \epsilon, (,), \cup, ^*, ^+, ?, !, \cdot\}$ defined inductively as follows:

(1) ϕ, ϵ and a are ERE's (for each $a \in \Sigma$).

(2) If α is an ERE, then so is (α).

(3) If α and β are ERE's, then so is $\alpha\beta$.

(4) If α and β are ERE's, then so is $\alpha \cup \beta$.

(5) If α is an ERE, then so is α^*.

(6) $\cdot$ is an ERE.

(7) If α is an ERE, then so is $\alpha?$.

(8) If α is an ERE, then so is α^+.

(9) If α is an ERE, then so is $!\alpha$.

(10) Nothing is an ERE unless it follows from (1)–(9) above.

Rules (1)–(5) bear the same meanings as for RE's. The informal meanings for (6)–(9) are as follows:

$\cdot$ means the single occurrence of any element of Σ.

$\alpha?$ means 0 or 1 occurrence of α.

α^+ means one or more occurrence(s) of α.

$!\alpha$ means $\beta \in \Sigma^*$ belongs to the language of $!\alpha$, if and only if $\beta \notin \mathcal{L}(\alpha)$.

(a) Formally extend the definition of $\mathcal{L}$ for ERE's, i.e., for ERE's α and β and $a \in \Sigma$ complete the following definitions: **(4)**

$\mathcal{L}(\phi) := \phi$. $\mathcal{L}(\epsilon) := \{\epsilon\}$. $\mathcal{L}(a) := \{a\}$.

$\mathcal{L}((\alpha)) := \mathcal{L}(\alpha)$.

$\mathcal{L}(\alpha\beta) := \mathcal{L}(\alpha)\mathcal{L}(\beta)$.

$\mathcal{L}(\alpha \cup \beta) := \mathcal{L}(\alpha) \cup \mathcal{L}(\beta)$.

$\mathcal{L}(\alpha^*) := (\mathcal{L}(\alpha))^*$.

$\mathcal{L}(\cdot) :=$

$\mathcal{L}(\alpha?) :=$

$\mathcal{L}(\alpha^+) :=$

$\mathcal{L}(!\alpha) :=$

(b) Let $\Sigma := \{a, b\}$. Find a regular expression (over Σ) whose language is the same as the language of the ERE $(b?)(!b)(\cdot^*)bb$. **(2)**
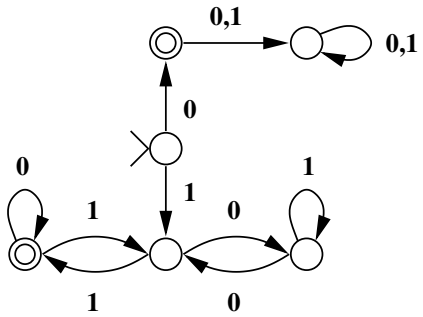
5. [Bonus problem] Give an informal description of the language accepted by the following DFA. **(10)**